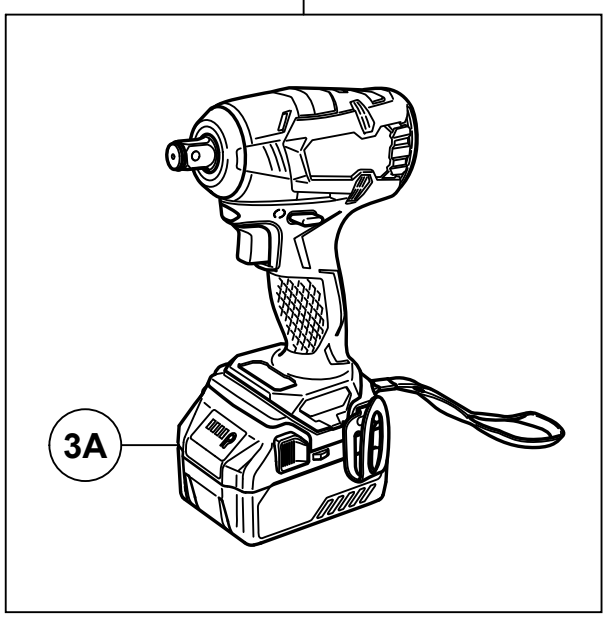

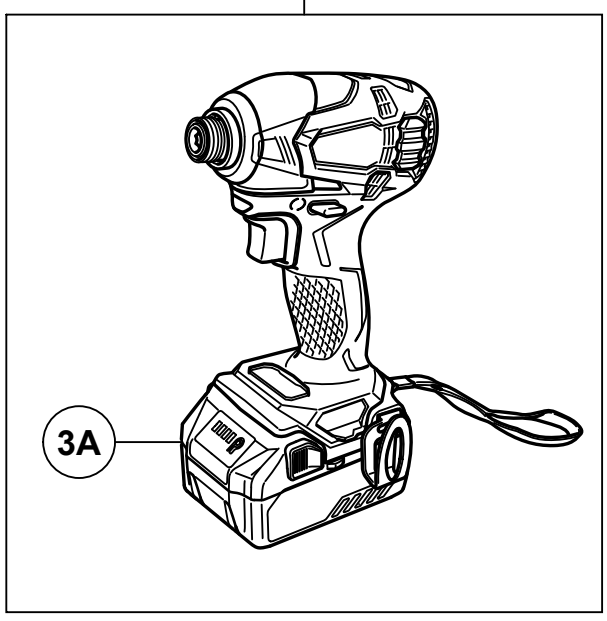

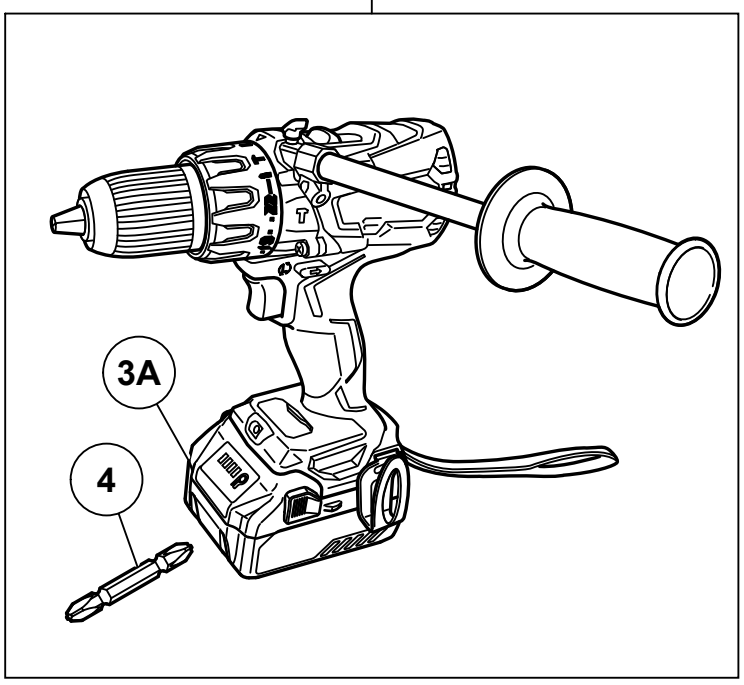

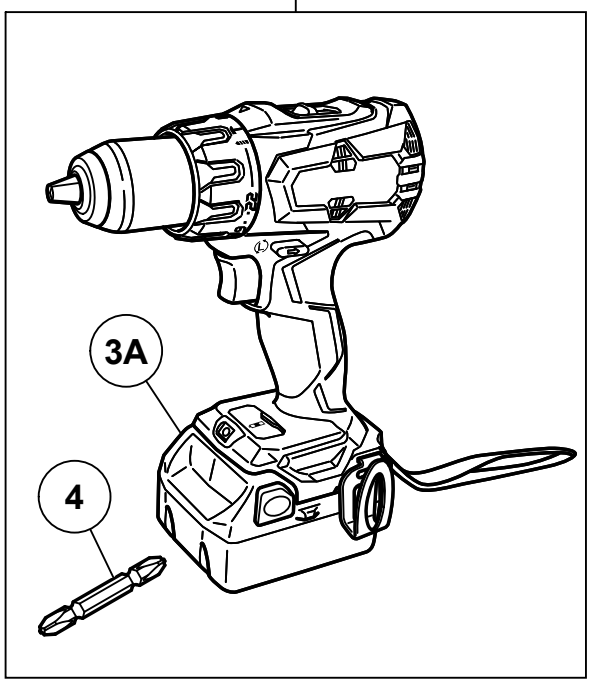

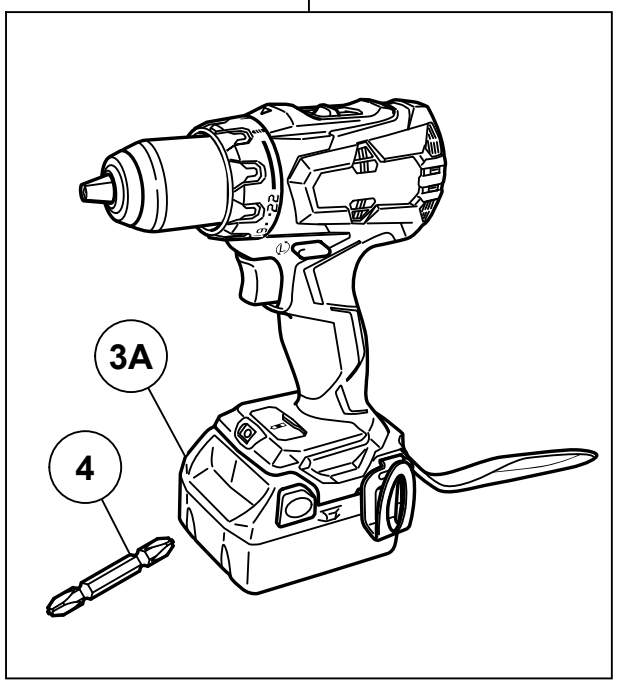

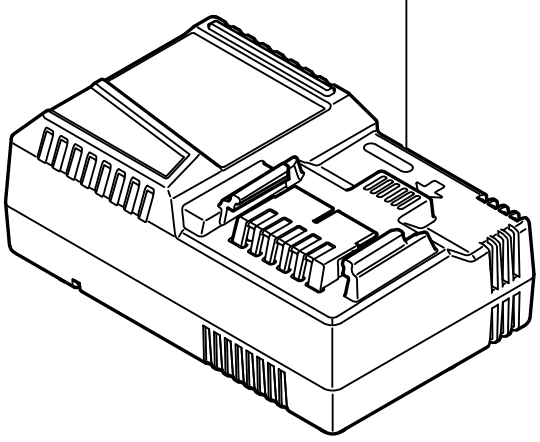

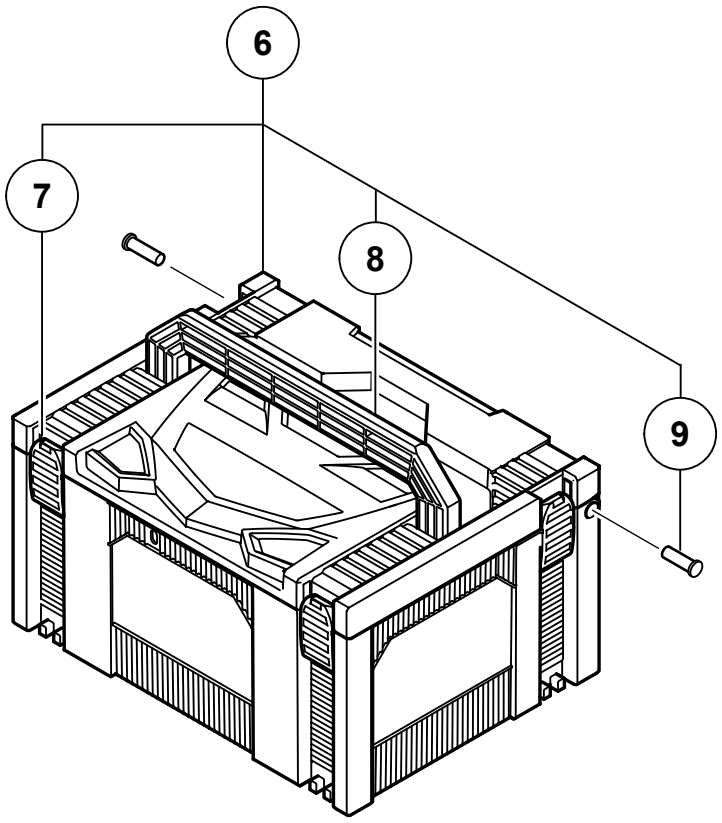

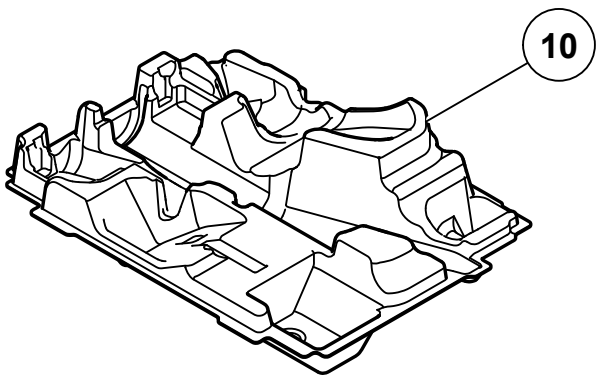

MODEL
KC18DPL

Rev.4
19.2.2021

HiKOKI

CORDLESS COMBO KIT KC18DPL

Item No.	Code No.	Description	No. Used	Remarks
*1		MODEL WR 18DBDL2 CORDLESS IMPACT WRENCH	1	
				FOR AUS,NZL,EUROPE,GBR
2		MODEL DS 18DBSL CORDLESS DRIVER DRILL	1	
				FOR EUROPE
*3A	335790	BATTERY BSL 1850 (EUROPE,AUS,NZL)	2	FOR EUROPE
4	983006	+ DRIVER BIT NO.2 65L	1	
5		MODEL UC 18YFSL CHARGER	1	
				FOR EUROPE
6	337108	CASE ASS'Y (STACKABLE 3)	1	INCLUD.7-9
7	336472	LATCH	4	
8	336473	HANDLE	1	
9	336474	HINGE	2	
10	339368	INNER TRAY	1	

* ALTERNATIVE PARTS